Dvorak Quarry

GRADING, DRAINAGE, & EROSION CONTROL PLANS

JOB NUMBER
24012

DOOR COUNTY, WISCONSIN

N

INDEX OF SHEETS

SHEET NO.	DESCRIPTION
1 of 10	COVER & INDEX SHEET
2 of 10	MINE SITE OVERALL PLAN & LEGAL DESCRIPTIONS
3 of 10	PHASE 1 – PROGRESSIVE GRADING PLAN
4 of 10	OVERALL GRADING PLAN
5 of 10	CROSS SECTION A – A
6 of 10	CROSS SECTION B – B
7 of 10	CROSS SECTION C – C
8 of 10	CROSS SECTION D – D
9 of 10	CONSTRUCTION DETAILS
10 of 10	CONSTRUCTION DETAILS

LOCATED IN:
THE NW 1/4 OF THE NE 1/4, SECTION 32,
TOWNSHIP 34 NORTH, RANGE 30 EAST,
TOWN OF WASHINGTON, DOOR COUNTY, WISCONSIN.

PARCEL NUMBER: 028–04–32343012B

PREPARED FOR:
RANDALL L. DVORAK
6332 WHITEFISH BAY ROAD
STURGEON BAY, WI
54235

BAUDHUIN SURVEYING & ENGINEERING
312 N. 5TH AVE.
P.O. BOX 105
STURGEON BAY, WI.
54235
PHONE: 920–743–8211

PATH: \\ME\LIWG\
PLAN NAME: DVD-SHEET-A
PROJECT DIRECTORY: DVORAK QUARRY - 24012
REVISED DATE: 06–12–20
DRAWN BY: VD
DESIGNED BY: JTL
DATE: 2–24–20
SCALE: NONE
JOB NUMBER: 24012

Dvorak Quarry

COVER & INDEX SHEET

REUSE OF DOCUMENTS
THIS DOCUMENT HAS BEEN DEVELOPED FOR A SPECIFIC APPLICATION AND NOT FOR GENERAL USE. THEREFORE IT MAY NOT BE USED WITHOUT THE WRITTEN APPROVAL OF BAUDHUIN INCORPORATED. UNAPPROVED USE IS THE SOLE RESPONSIBILITY OF THE UNAUTHORIZED USER.

LOCATED IN:
THE NW 1/4 OF THE NE 1/4 OF
SECTION 32, TOWNSHIP 34 NORTH, RANGE 30 EAST,
TOWN OF WASHINGTON,
DOOR COUNTY,
WISCONSIN.

NORTH
1" = 60'
0 30 60 120
FEET

NOTE:
ALL BEARINGS, DISTANCES, TIES TO SECTION CORNERS, ETC., ARE AS PER BREY, STUEWE, & BRAUN SURVEY DATED OCT. 2, 1981, JOB NUMBER D-80236.

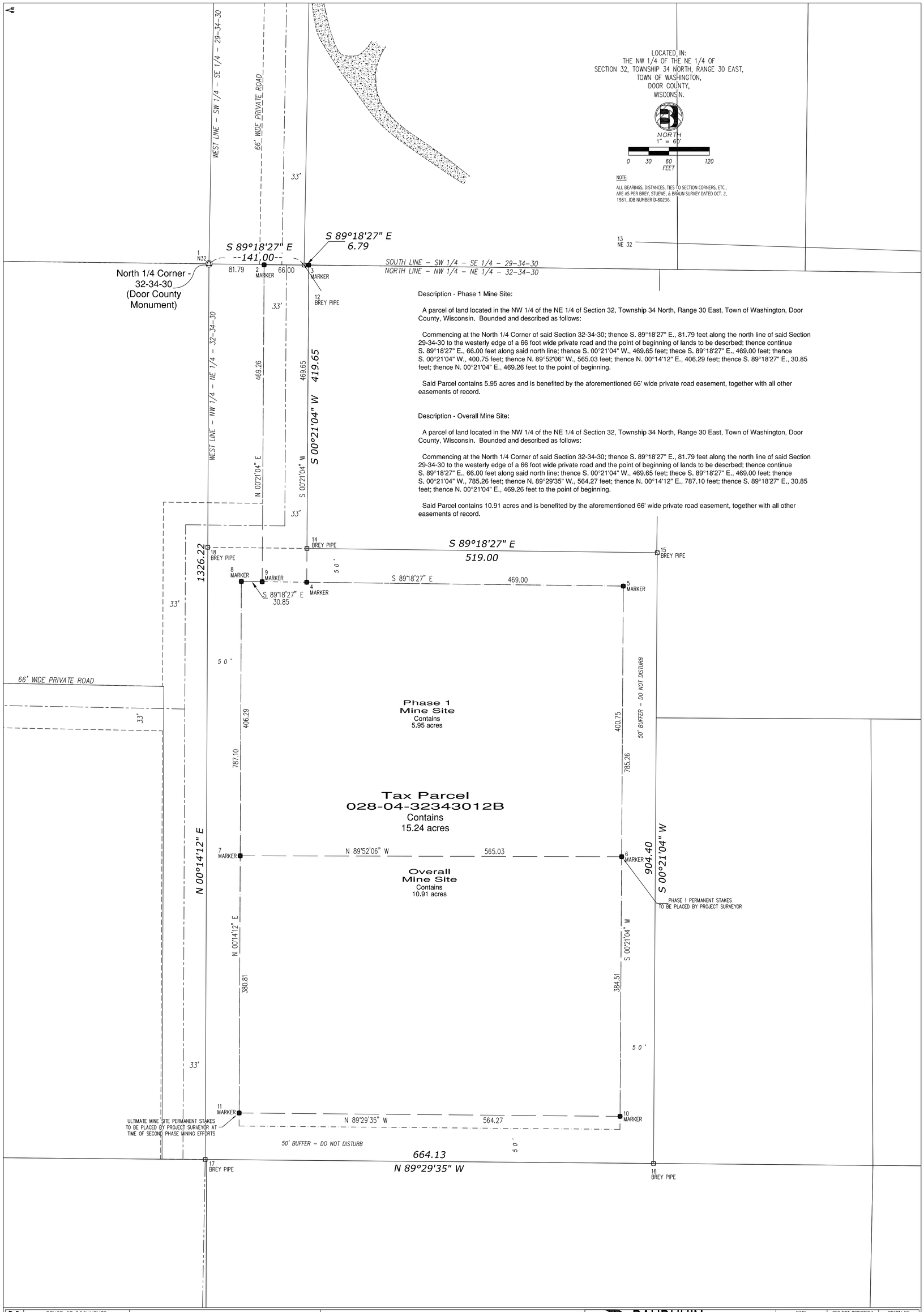

Description - Phase 1 Mine Site:

A parcel of land located in the NW 1/4 of the NE 1/4 of Section 32, Township 34 North, Range 30 East, Town of Washington, Door County, Wisconsin. Bounded and described as follows:

Commencing at the North 1/4 Corner of said Section 32-34-30; thence S. 89°18'27" E., 81.79 feet along the north line of said Section 29-34-30 to the westerly edge of a 66 foot wide private road and the point of beginning of lands to be descrbed; thence continue S. 89°18'27" E., 66.00 feet along said north line; thence S. 00°21'04" W., 469.65 feet; thece S. 89°18'27" E., 469.00 feet; thence S. 00°21'04" W., 400.75 feet; thence N. 89°52'06" W., 565.03 feet; thence N. 00°14'12" E., 406.29 feet; thence S. 89°18'27" E., 30.85 feet; thence N. 00°21'04" E., 469.26 feet to the point of beginning.

Said Parcel contains 5.95 acres and is benefited by the aforementioned 66' wide private road easement, together with all other easements of record.

Description - Overall Mine Site:

A parcel of land located in the NW 1/4 of the NE 1/4 of Section 32, Township 34 North, Range 30 East, Town of Washington, Door County, Wisconsin. Bounded and described as follows:

Commencing at the North 1/4 Corner of said Section 32-34-30; thence S. 89°18'27" E., 81.79 feet along the north line of said Section 29-34-30 to the westerly edge of a 66 foot wide private road and the point of beginning of lands to be descrbed; thence continue S. 89°18'27" E., 66.00 feet along said north line; thence S. 00°21'04" W., 469.65 feet; thece S. 89°18'27" E., 469.00 feet; thence S. 00°21'04" W., 785.26 feet; thence N. 89°29'35" W., 564.27 feet; thence N. 00°14'12" E., 787.10 feet; thence S. 89°18'27" E., 30.85 feet; thence N. 00°21'04" E., 469.26 feet to the point of beginning.

Said Parcel contains 10.91 acres and is benefited by the aforementioned 66' wide private road easement, together with all other easements of record.

REUSE OF DOCUMENTS
THIS DOCUMENT HAS BEEN DEVELOPED FOR A SPECIFIC APPLICATION AND NOT FOR GENERAL USE. THEREFORE IT MAY NOT BE USED WITHOUT THE WRITTEN APPROVAL OF BAUDHUIN INCORPORATED. UNAPPROVED USE IS THE SOLE RESPONSIBILITY OF THE UNAUTHORIZED USER.

MINE SITE OVERALL PLAN & LEGAL DESCRIPTIONS

Dvorak Quarry

BAUDHUIN SURVEYING & ENGINEERING
312 N. 5TH AVE.
P.O. BOX 105
STURGEON BAY, WI.
54235
PHONE: 920-743-8211

PATH: \RMB\LDWG\	PROJECT DIRECTORY: DVORAK QUARRY - 24012	DRAWN BY: vb
PLAN NAME: 012-EXT		DESIGNED BY: P.J.H.
REVISED DATE: 06-12-20		DATE: 2-24-20
SCALE: 1" = 60'		JOB NUMBER: 24012

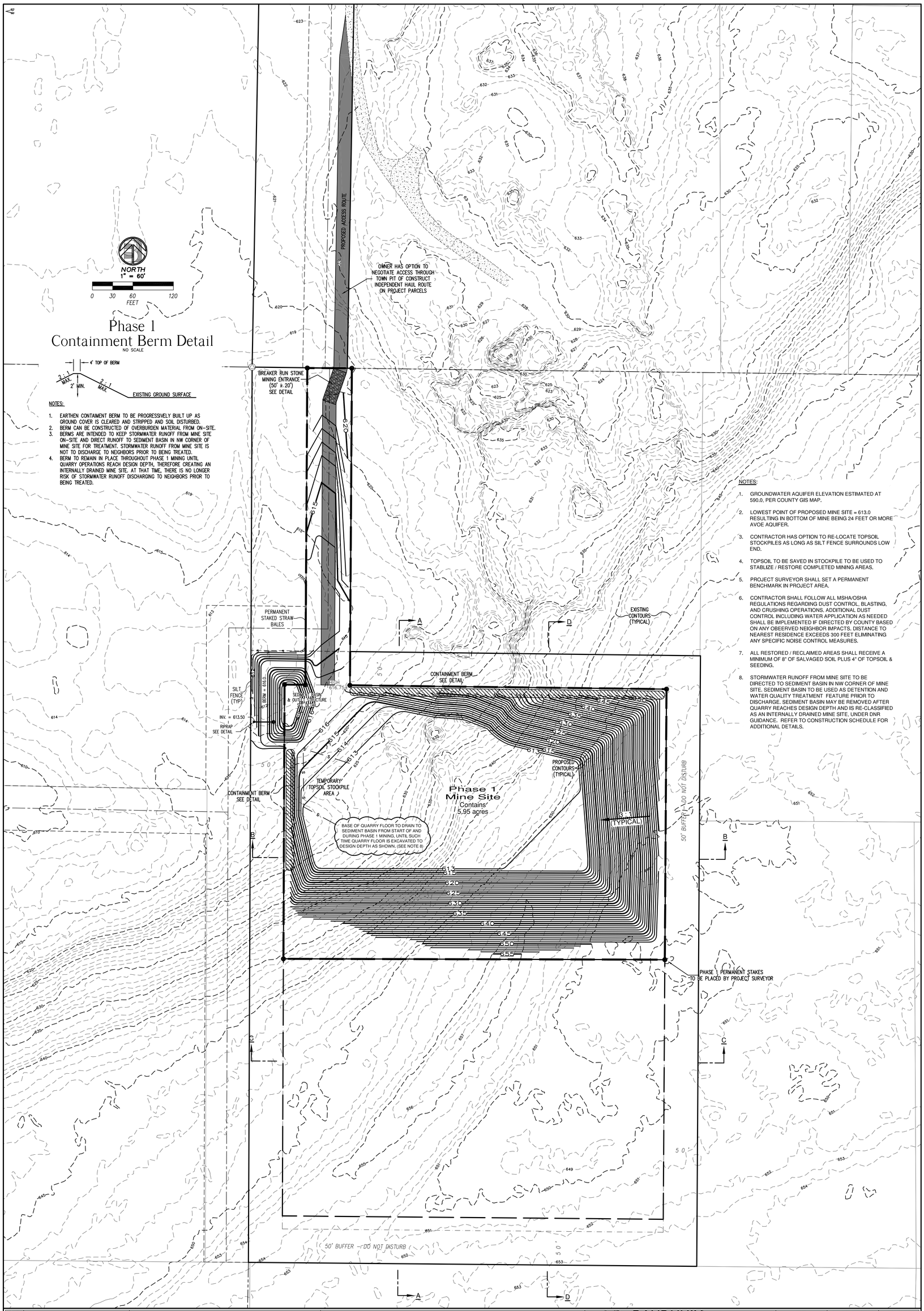

Phase 1
Containment Berm Detail

NO SCALE

NOTES:

1. EARTHEN CONTAIMENT BERM TO BE PROGRESSIVELY BUILT UP AS GROUND COVER IS CLEARED AND STRIPPED AND SOIL DISTURBED.
2. BERM CAN BE CONSTRUCTED OF OVERBURDEN MATERIAL FROM ON-SITE.
3. BERMS ARE INTENDED TO KEEP STORMWATER RUNOFF FROM MINE SITE ON-SITE AND DIRECT RUNOFF TO SEDIMENT BASIN IN NW CORNER OF MINE SITE FOR TREATMENT. STORMWATER RUNOFF FROM MINE SITE IS NOT TO DISCHARGE TO NEIGHBORS PRIOR TO BEING TREATED.
4. BERM TO REMAIN IN PLACE THROUGHOUT PHASE 1 MINING UNTIL QUARRY OPERATIONS REACH DESIGN DEPTH, THEREFORE CREATING AN INTERNALLY DRAINED MINE SITE. AT THAT TIME, THERE IS NO LONGER RISK OF STORMWATER RUNOFF DISCHARGING TO NEIGHBORS PRIOR TO BEING TREATED.

NOTES:

1. GROUNDWATER AQUIFER ELEVATION ESTIMATED AT 590.0, PER COUNTY GIS MAP.
2. LOWEST POINT OF PROPOSED MINE SITE = 613.0 RESULTING IN BOTTOM OF MINE BEING 24 FEET OR MORE AVOE AQUIFER.
3. CONTRACTOR HAS OPTION TO RE-LOCATE TOPSOIL STOCKPILES AS LONG AS SILT FENCE SURROUNDS LOW END.
4. TOPSOIL TO BE SAVED IN STOCKPILE TO BE USED TO STABLIZE / RESTORE COMPLETED MINING AREAS.
5. PROJECT SURVEYOR SHALL SET A PERMANENT BENCHMARK IN PROJECT AREA.
6. CONTRACTOR SHALL FOLLOW ALL MSHA/OSHA REGULATIONS REGARDING DUST CONTROL, BLASTING, AND CRUSHING OPERATIONS. ADDITIONAL DUST CONTROL INCLUDING WATER APPLICATION AS NEEDED SHALL BE IMPLEMENTED IF DIRECTED BY COUNTY BASED ON ANY OBEERVED NEIGHBOR IMPACTS. DISTANCE TO NEAREST RESIDENCE EXCEEDS 300 FEET ELIMINATING ANY SPECIFIC NOISE CONTROL MEASURES.
7. ALL RESTORED / RECLAIMED AREAS SHALL RECEIVE A MINIMUM OF 8" OF SALVAGED SOIL PLUS 4" OF TOPSOIL & SEEDING.
8. STORMWATER RUNOFF FROM MINE SITE TO BE DIRECTED TO SEDIMENT BASIN IN NW CORNER OF MINE SITE. SEDIMENT BASIN TO BE USED AS DETENTION AND WATER QUALITY TREATMENT FEATURE PRIOR TO DISCHARGE. SEDIMENT BASIN MAY BE REMOVED AFTER QUARRY REACHES DESIGN DEPTH AND IS RE-CLASSIFIED AS AN INTERNALLY DRAINED MINE SITE, UNDER DNR GUIDANCE. REFER TO CONSTRUCTION SCHEDULE FOR ADDITIONAL DETAILS.

REUSE OF DOCUMENTS
THIS DOCUMENT HAS BEEN DEVELOPED FOR A SPECIFIC APPLICATION AND NOT FOR GENERAL USE. THEREFORE IT MAY NOT BE USED WITHOUT THE WRITTEN APPROVAL OF BAUDHUIN INCORPORATED. UNAPPROVED USE IS THE SOLE RESPONSIBILITY OF THE UNAUTHORIZED USER.

PHASE 1 – PROGRESSIVE GRADING PLAN

Dvorak Quarry

BAUDHUIN SURVEYING & ENGINEERING
312 N. 5TH AVE.
P.O. BOX 105
STURGEON BAY, WI.
54235
PHONE: 920-743-8211

PATH: \RMB\LDWG\	PROJECT DIRECTORY: DVORAK QUARRY - 24012	DRAWN BY: JB
PLAN NAME: 012-DES-A		DESIGNED BY: P.J.H.
REVISED DATE: 06-12-20		DATE: 2-24-20
SCALE: 1" = 60'		JOB NUMBER: 24012

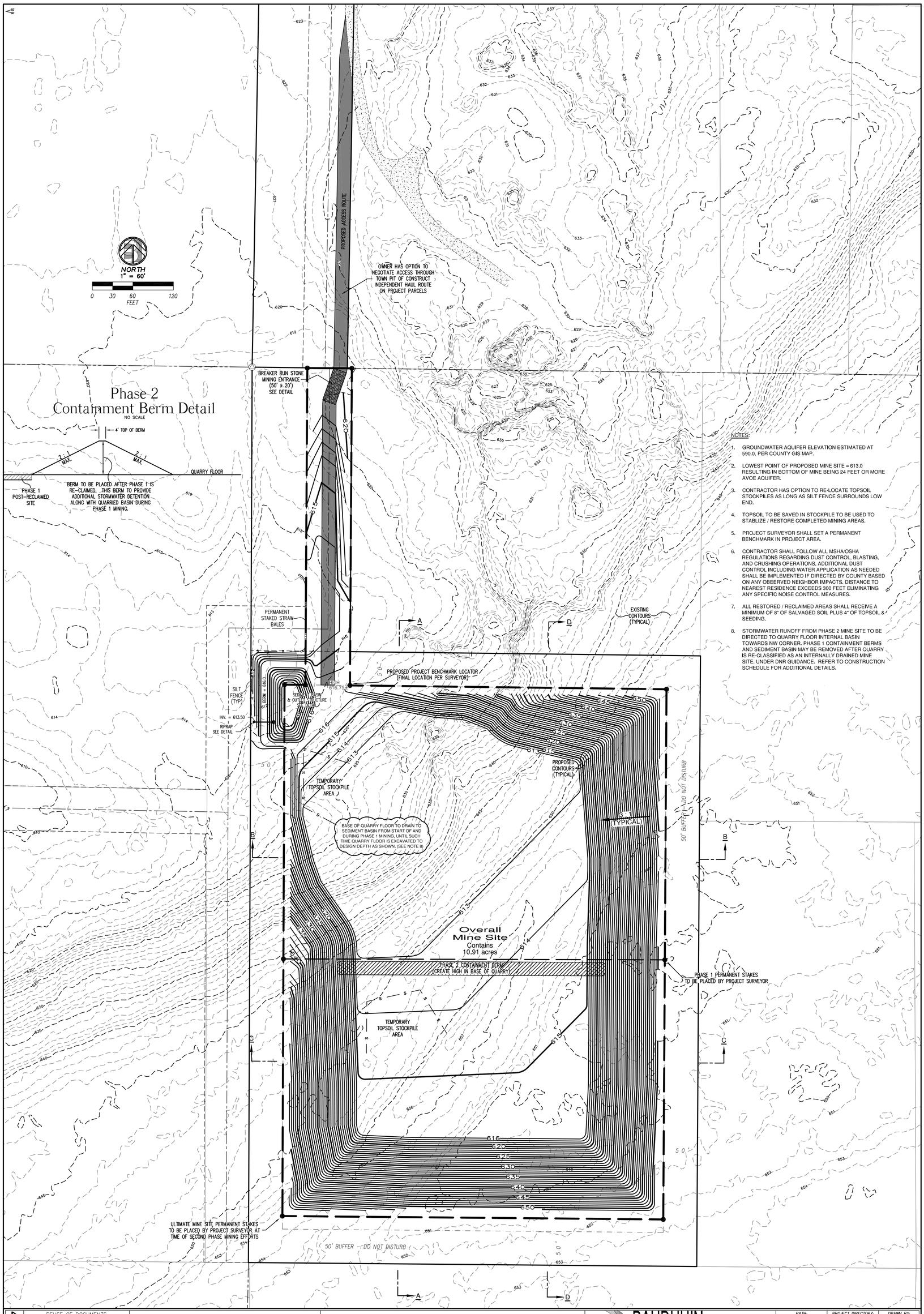

NOTES:

1. GROUNDWATER AQUIFER ELEVATION ESTIMATED AT 590.0, PER COUNTY GIS MAP.
2. LOWEST POINT OF PROPOSED MINE SITE = 613.0 RESULTING IN BOTTOM OF MINE BEING 24 FEET OR MORE AVOE AQUIFER.
3. CONTRACTOR HAS OPTION TO RE-LOCATE TOPSOIL STOCKPILES AS LONG AS SILT FENCE SURROUNDS LOW END.
4. TOPSOIL TO BE SAVED IN STOCKPILE TO BE USED TO STABLIZE / RESTORE COMPLETED MINING AREAS.
5. PROJECT SURVEYOR SHALL SET A PERMANENT BENCHMARK IN PROJECT AREA.
6. CONTRACTOR SHALL FOLLOW ALL MSHA/OSHA REGULATIONS REGARDING DUST CONTROL, BLASTING, AND CRUSHING OPERATIONS, ADDITIONAL DUST CONTROL INCLUDING WATER APPLICATION AS NEEDED SHALL BE IMPLEMENTED IF DIRECTED BY COUNTY BASED ON ANY OBEERVED NEIGHBOR IMPACTS. DISTANCE TO NEAREST RESIDENCE EXCEEDS 300 FEET ELIMINATING ANY SPECIFIC NOISE CONTROL MEASURES.
7. ALL RESTORED / RECLAIMED AREAS SHALL RECEIVE A MINIMUM OF 8" OF SALVAGED SOIL PLUS 4" OF TOPSOIL & SEEDING.
8. STORMWATER RUNOFF FROM PHASE 2 MINE SITE TO BE DIRECTED TO QUARRY FLOOR INTERNAL BASIN TOWARDS NW CORNER. PHASE 1 CONTAINMENT BERMS AND SEDIMENT BASIN MAY BE REMOVED AFTER QUARRY IS RE-CLASSIFIED AS AN INTERNALLY DRAINED MINE SITE, UNDER DNR GUIDANCE. REFER TO CONSTRUCTION SCHEDULE FOR ADDITIONAL DETAILS.

REUSE OF DOCUMENTS
THIS DOCUMENT HAS BEEN DEVELOPED FOR A SPECIFIC APPLICATION AND NOT FOR GENERAL USE. THEREFORE IT MAY NOT BE USED WITHOUT THE WRITTEN APPROVAL OF BAUDHUIN INCORPORATED. UNAPPROVED USE IS THE SOLE RESPONSIBILITY OF THE UNAUTHORIZED USER.

OVERALL GRADING PLAN

Dvorak Quarry

BAUDHUIN SURVEYING & ENGINEERING
312 N. 5TH AVE.
P.O. BOX 105
STURGEON BAY, WI.
54235
PHONE: 920-743-8211

PATH: \RMB\LDWG\	PROJECT DIRECTORY: DVORAK QUARRY - 24012	DRAWN BY: JB
PLAN NAME: 012-DES-A		DESIGNED BY: P.J.H.
REVISED DATE: 6-12-20		DATE: 2-24-20
SCALE: 1" = 60'		JOB NUMBER: 24012

SECTION A - A

SCALES:
HORIZ. – 1" = 40'
VERT. – 4'

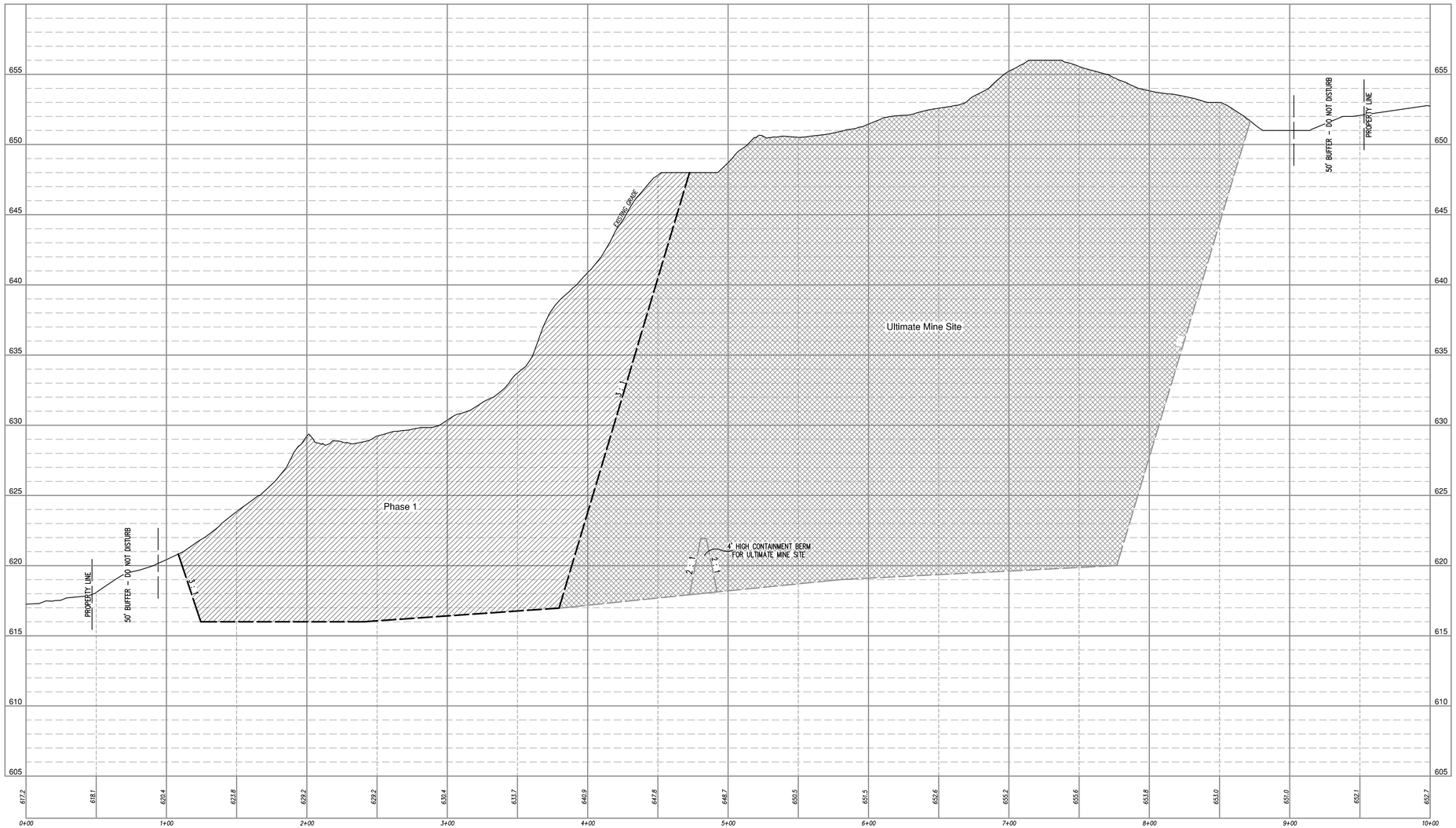

NOTE:

GROUNDWATER ELEVATION ESTIMATED AT 590.0, PER DOOR COUNTY GIS MAP (SEE TYPICAL SECTION VIEW - SHEET 9 OF 10).

PATH: \\AWS\LIWG\
PLAN NAME: DVR-SECT-A
PROJECT DIRECTORY: DVORAK QUARRY - 24012
DRAWN BY: VD
DESIGNED BY: JTL
REVISED DATE: 06-12-20
DATE: 2-24-20
SCALE: HORIZ. – 1" = 40' VERT. – 1" = 4'
JOB NUMBER: 24012

BAUDHUIN SURVEYING & ENGINEERING
312 N. 5TH AVE.
P.O. BOX 105
STURGEON BAY, WI.
54235
PHONE: 920-743-8211

Dvorak Quarry

CROSS SECTION A – A

REUSE OF DOCUMENTS
THIS DOCUMENT HAS BEEN DEVELOPED FOR A SPECIFIC APPLICATION AND NOT FOR GENERAL USE. THEREFORE IT MAY NOT BE USED WITHOUT THE WRITTEN APPROVAL OF BAUDHUIN INCORPORATED. UNAPPROVED USE IS THE SOLE RESPONSIBILITY OF THE UNAUTHORIZED USER.

SECTION B - B

SCALES:
HORIZ. – 1" = 40'
VERT. – 4'

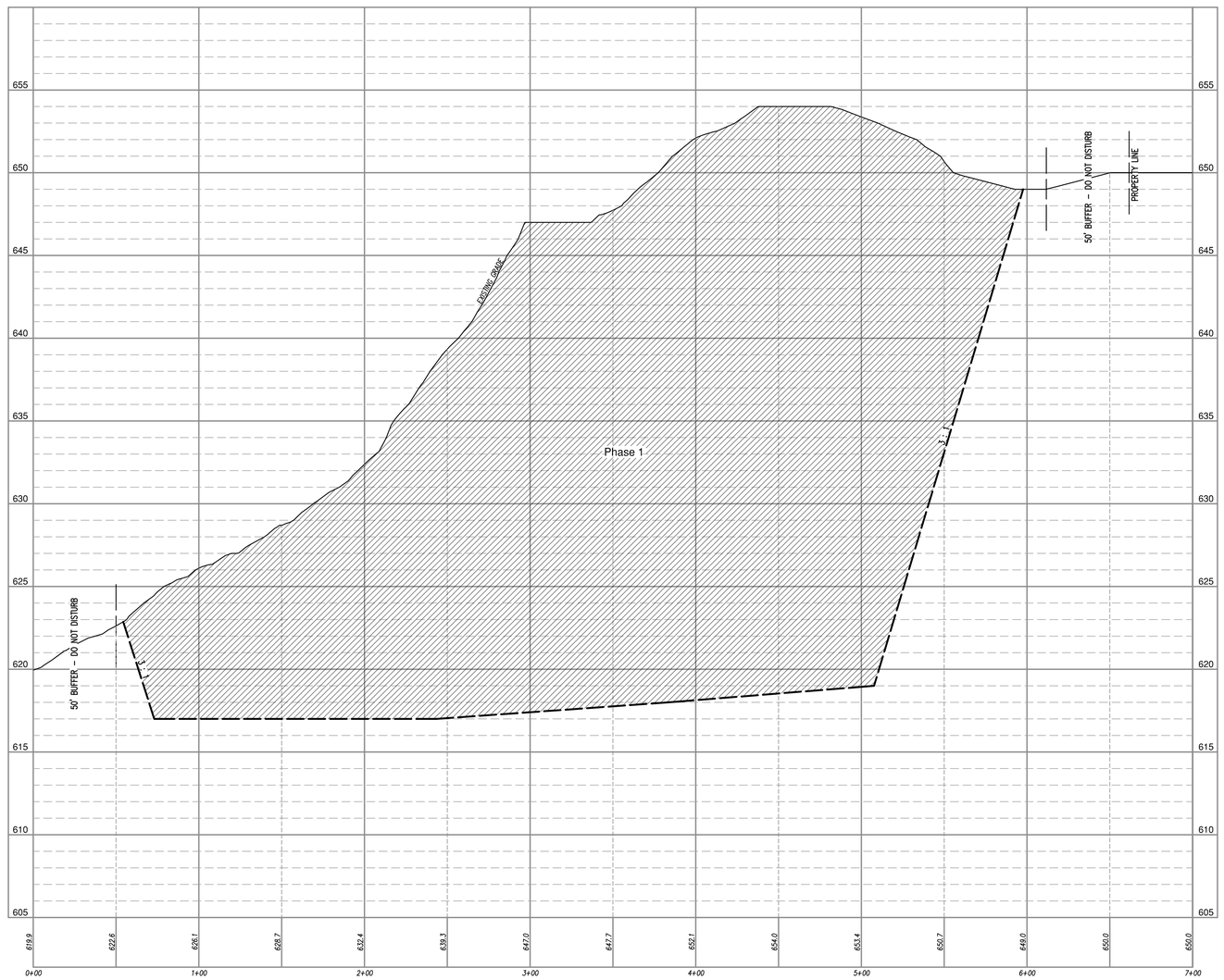

NOTE:
GROUNDWATER ELEVATION ESTIMATED AT 590.0, PER DOOR COUNTY GIS MAP (SEE TYPICAL SECTION VIEW - SHEET 9 OF 10).

PATH: \CAD\LIWCA
PLAN NAME: DTC-SECT-A
PROJECT DIRECTORY: DVORAK QUARRY - 24012
DRAWN BY: VD
DESIGNED BY: JTL
REVISED DATE: 06-12-20
DATE: 2-24-20
SCALE: HORIZ. – 1" = 40' VERT. – 1" = 4'
JOB NUMBER: 24012

BAUDHUIN SURVEYING & ENGINEERING
312 N. 5TH AVE.
P.O. BOX 105
STURGEON BAY, WI.
54235
PHONE: 920-743-8211

Dvorak Quarry

CROSS SECTION
B – B

REUSE OF DOCUMENTS
THIS DOCUMENT HAS BEEN DEVELOPED FOR A SPECIFIC APPLICATION AND NOT FOR GENERAL USE. THEREFORE IT MAY NOT BE REUSED WITHOUT THE WRITTEN APPROVAL OF BAUDHUIN INCORPORATED. UNAPPROVED USE IS THE EXCLUSIVE RESPONSIBILITY OF THE UNAUTHORIZED USER.

SECTION C - C

SCALES:
HORIZ. – 1" = 40'
VERT. – 4'

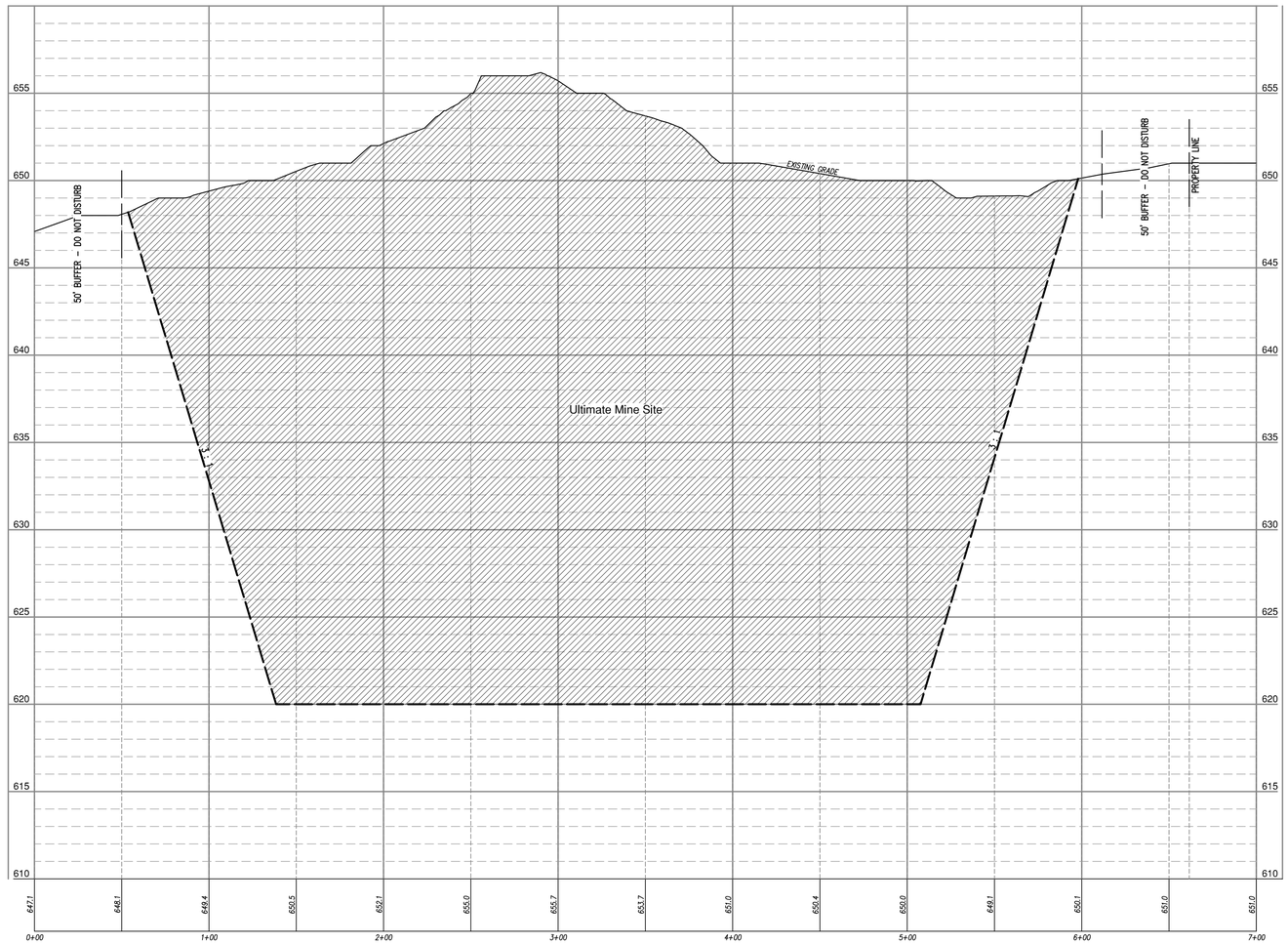

NOTE:
GROUNDWATER ELEVATION ESTIMATED AT 590.0, PER DOOR COUNTY GIS MAP (SEE TYPICAL SECTION VIEW - SHEET 9 OF 10).

BAUDHUIN SURVEYING & ENGINEERING
312 N. 5TH AVE.
P.O. BOX 105
STURGEON BAY, WI.
54235
PHONE: 920-743-8211

PATH: \VAULT\WG\
PLAN NAME: DVT-CRSS-A
PROJECT DIRECTORY: DVORAK QUARRY - 24012
REVISED DATE: 06-12-20
DRAWN BY: VD
DESIGNED BY: VD
DATE: 2-24-20
SCALE: HORIZ. – 1" = 40' VERT. – 1" = 4'
JOB NUMBER: 24012

Dvorak Quarry

CROSS SECTION C – C

REUSE OF DOCUMENTS
THIS DOCUMENT HAS BEEN DEVELOPED FOR A SPECIFIC APPLICATION AND NOT FOR GENERAL USE. THEREFORE IT MAY NOT BE ORIGINALLY THE INTENDED APPROVAL OF BAUDHUIN INCORPORATED. UNAPPROVED USE OR REPRODUCTION IS THE RESPONSIBILITY OF THE UNAUTHORIZED USER.

SECTION D - D

SCALES:
HORIZ. – 1" = 40'
VERT. – 4'

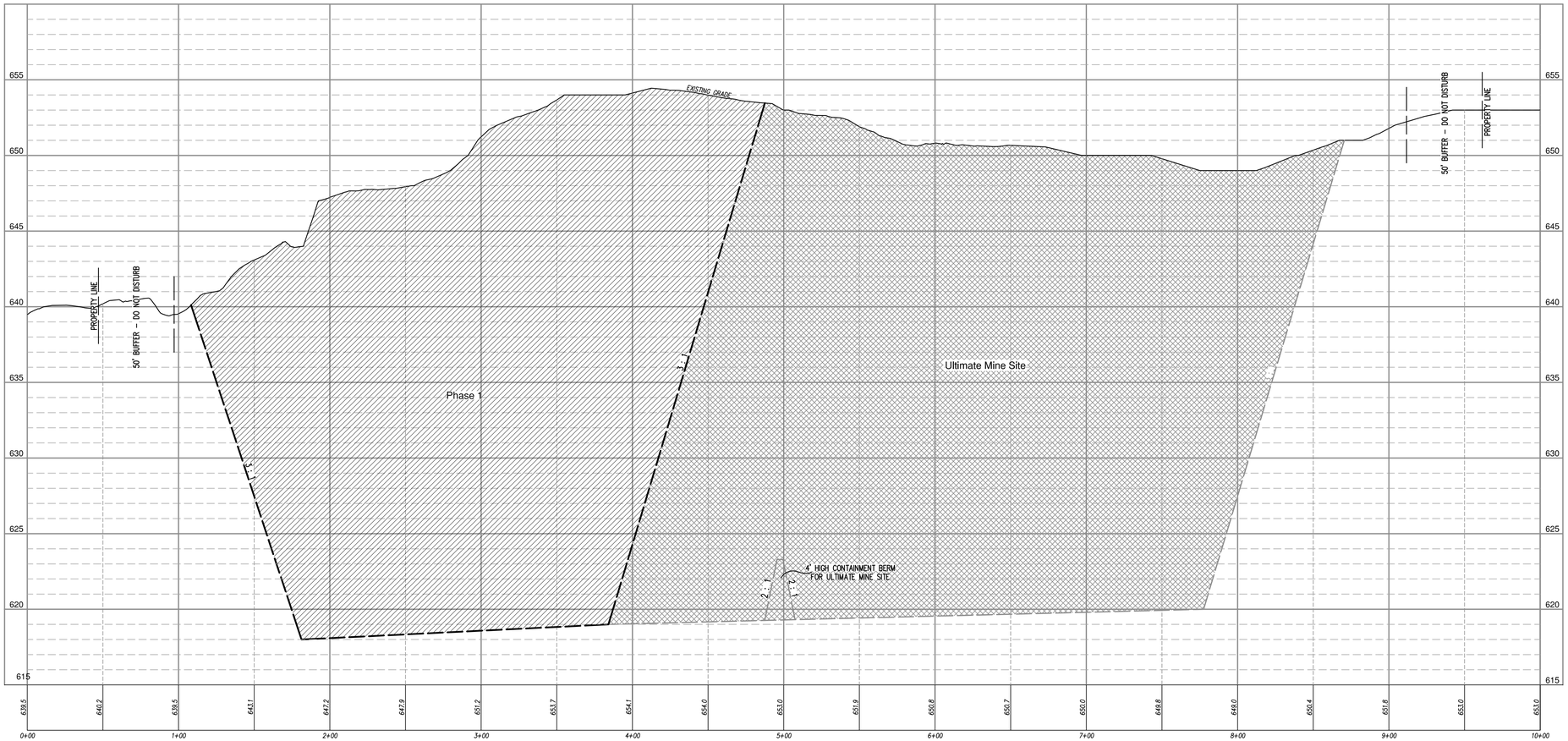

NOTE:
GROUNDWATER ELEVATION ESTIMATED AT 590.0, PER DOOR COUNTY GIS MAP (SEE TYPICAL SECTION VIEW - SHEET 9 OF 10).

PATH: \\AWS\LIWG\
PLAN NAME: DTC-DESS-A
PROJECT DIRECTORY: DVORAK QUARRY - 24012
DRAWN BY: VD
DESIGNED BY: JTL
REVISED DATE: 06-12-20
DATE: 2-24-20
SCALE: HORIZ. – 1" = 40' VERT. – 1" = 4'
JOB NUMBER: 24012

BAUDHUIN SURVEYING & ENGINEERING
312 N. 5TH AVE.
P.O. BOX 105
STURGEON BAY, WI. 54235
PHONE: 920-743-8211

Dvorak Quarry

CROSS SECTION D – D

REUSE OF DOCUMENTS
THIS DOCUMENT HAS BEEN DEVELOPED FOR A SPECIFIC APPLICATION AND NOT FOR GENERAL USE. THEREFORE IT MAY NOT BE USED WITHOUT WRITTEN APPROVAL OF BAUDHUIN INCORPORATED. UNAPPROVED USE IS THE SOLE RESPONSIBILITY OF THE UNAUTHORIZED USER.

TYPICAL MINE SECTION VIEW

1" = 40'

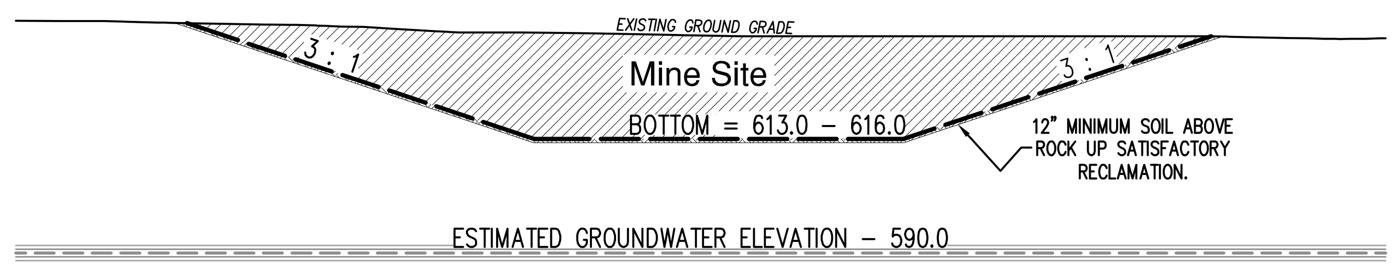

Breaker Run Stone Mining Entrance

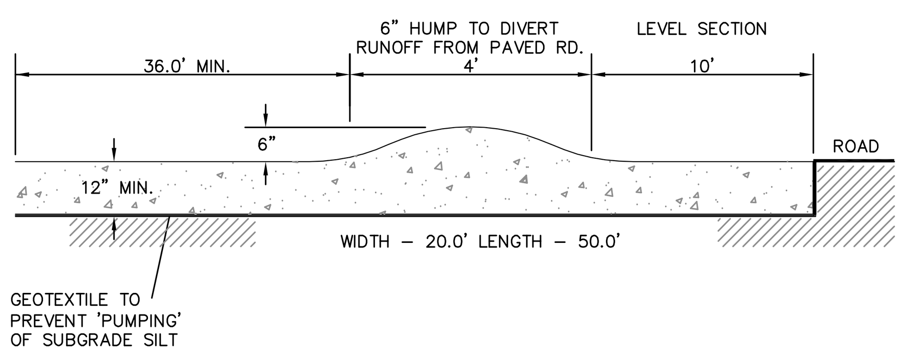

SPECIFICATIONS:

1. CLEAR THE ENTRANCE / EXIT AREA OF ALL VEGETATION, ROOTS, AND OTHER OBJECTIONABLE MATERIAL.
2. GRADE THE ROAD FOUNDATION SO THAT THE ENTRANCE / EXIT WILL HAVE A CROSS SLOPE.
3. PLACE STONE TO THE DIMENSIONS, GRADE AND ELEVATION SHOWN.
4. USE WASHED STONE 3" TO 6" IN SIZE.
5. DO NOT COMPACT AGGREGATE.

NOTE:

- MAINTAIN THE STONE PAD IN A CONDITION TO PREVENT MUD OR SEDIMENT FROM LEAVING THE SITE.
- MUD OR SEDIMENT THAT IS TRACKED OR WASHED ONTO ROAD MUST BE REMOVED IMMEDIATELY.
- TRACKOUT PAD SHALL CONFORM TO WDNR TECHNICAL STANDARD 1057.
- TRACKOUT PAD SHOULD BE INSPECTED REGULARLY TO VERIFY IT IS WORKING AS INTENDED. MAINTAIN TRACKOUT PAD AS NEEDED WHICH MAY REQUIRE "LOOSENING" COMPACTED STONE OR REMOVING COMPACTED/FINE FILLED PAD AND REPLACING WITH NEW STONE ACCORDING TO ABOVE SPECIFICATIONS.

Straw Bale Fence

NO SCALE

1. Excavate a trench four inches deep.
2. Set bales in trench with the binding parallel to ground. Each bale should be jammed against the next one to leave no gaps between bales.
3. Drive two stakes or steel rebars at least 8 inches into the ground to anchor each bale.
4. Backfill and compact the excavated soil.

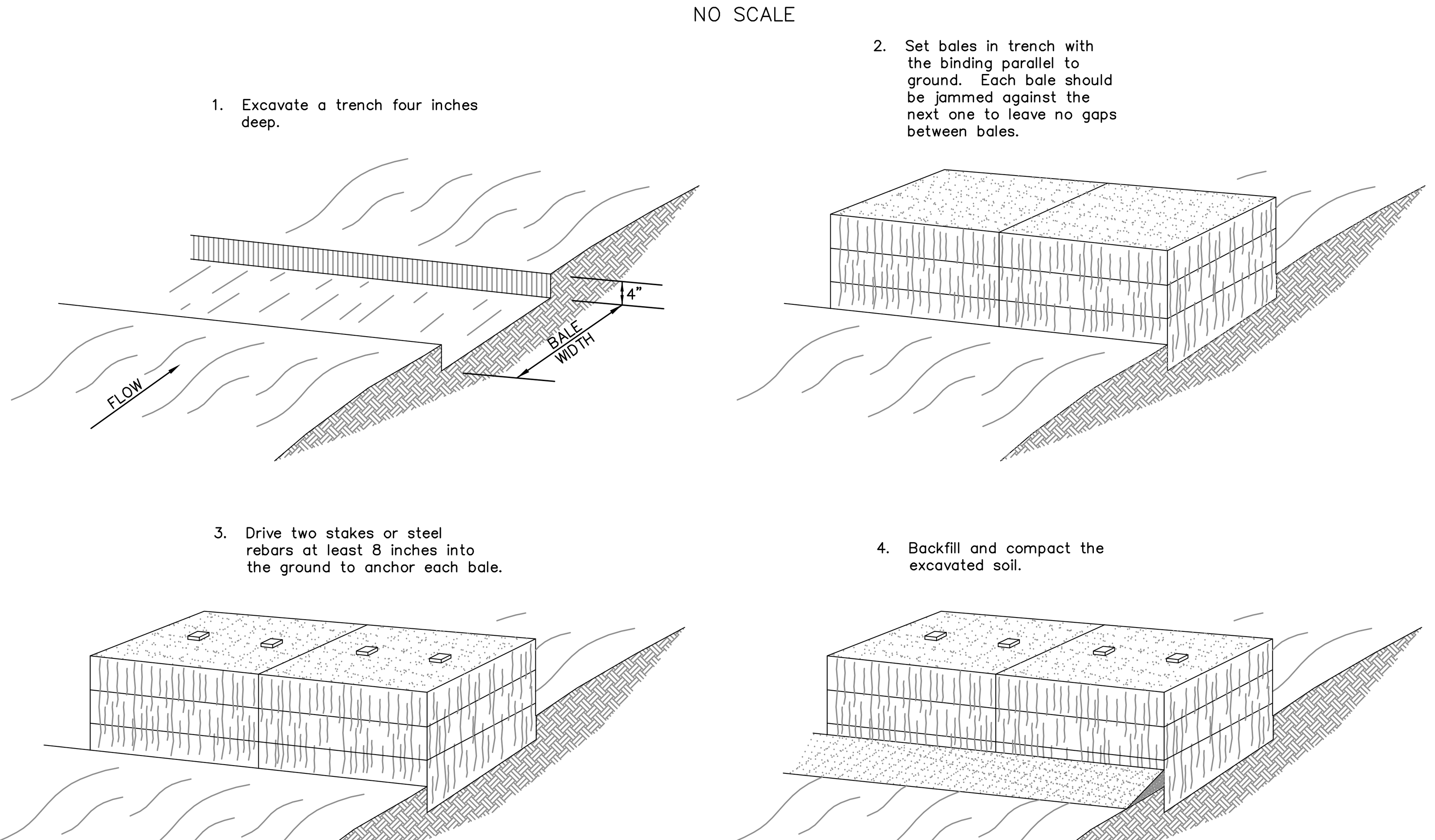

Erosion Control Notes

1. IN ACCORDANCE WITH NR 216.46(9) AND NR 216.48(4), THE LANDOWNER, OR THE LANDOWNER'S REPRESENTATIVE, SHALL INSPECT EROSION AND SEDIMENT CONTROL PRACTICES WEEKLY, AND WITHIN 24 HOURS FOLLOWING A RAINFALL OF 0.5 INCHES OR GREATER. WRITTEN DOCUMENTATION OF EACH INSPECTION SHALL BE MAINTAINED AT THE CONSTRUCTION SITE AND SHALL INCLUDE THE TIME, DATE AND LOCATION OF INSPECTION, THE PHASE OF LAND DISTURBANCE AT THE CONSTRUCTION SITE, PERSON CONDUCTING THE INSPECTION, ASSESSMENT OF CONTROL PRACTICES, AND A DESCRIPTION OF ANY EROSION OR SEDIMENT CONTROL MEASURE INSTALLATION OR MAINTENANCE PERFORMED IN RESPONSE TO THE INSPECTION.
2. ANY SOIL STOCKPILE THAT REMAINS FOR MORE THAN 7 DAYS SHALL BE COVERED OR TREATED WITH STABILIZATION PRACTICES SUCH AS TEMPORARY OR PERMANENT SEEDING AND MULCHING. SEEDING SHALL FOLLOW THE REQUIREMENTS OF WDNR TECHNICAL STANDARDS 1058 AND 1059 AND WIS. DOT STANDARD SPECIFICATIONS, SECTION 630.
3. A MINIMUM OF 4 TO 6 INCHES OF TOPSOIL MUST BE APPLIED TO ALL AREAS TO BE SEEDED OR SODDED ACCORDING TO WDNR TECHNICAL STANDARD 1059.
4. ALL OFF-SITE SEDIMENT DEPOSITS OCCURRING AS A RESULT OF CONSTRUCTION WORK OR STORM EVENT SHALL BE CLEANED UP BY THE END OF EACH DAY. FLUSHING SHALL NOT BE ALLOWED. IMPLEMENT TEMPORARY GRADING PRACTICES AS DESCRIBED IN WDNR TECHNICAL STANDARDS 1066 AND 1067 TO PREVENT SEDIMENT FROM LEAVING THE SITE.
5. ALL DISTURBED AREAS SHALL BE TREATED WITH STABILIZATION MEASURES, AS SPECIFIED, WITHIN 3 WORKING DAYS OF FINAL GRADING.
6. ANY SOIL EROSION THAT OCCURS AFTER FINAL GRADING AND/OR THE APPLICATION OF STABILIZATION MEASURES MUST BE REPAIRED AND STABILIZATION WORK REDONE.
7. TREAT ANY DISTURBED AREA THAT REMAINS INACTIVE FOR GREATER THAN 30 WORKING DAYS OR WHERE GRADING WORK EXTENDS BEYOND THE PERMANENT SEEDING DEADLINES WITH TEMPORARY BEST MANAGEMENT PRACTICES SUCH AS LAND APPLICATION OF ANIONIC POLYACRYLAMIDE, STRAW BALES, SILT FENCE, MULCHING, TEMPORARY SEEDING, AND SEDIMENT TRAPS AS RESPECTIVELY REQUIRED BY WDNR TECHNICAL STANDARDS 1050, 1055, 1056, 1058, 1059, AND 1063.
8. ALL TEMPORARY BEST MANAGEMENT PRACTICES SHALL BE MAINTAINED UNTIL THE SITE IS STABILIZED.
9. WIND EROSION SHALL BE KEPT TO A MINIMUM DURING CONSTRUCTION. WATERING, MULCHING, OR A TACKING AGENT MAY NEED TO BE UTILIZED TO PROTECT NEARBY RESIDENTS AND WATER RESOURCES. DUST CONTROL MEASURES SHALL BE IMPLEMENTED ACCORDING TO WDNR TECHNICAL STANDARD 1068.
10. WHEN THE DISTURBED AREA HAS BEEN STABILIZED BY PERMANENT VEGETATION OR OTHER MEANS, TEMPORARY BEST MANAGEMENT PRACTICES SUCH AS SILT FENCE, STRAW BALES, AND SEDIMENT TRAPS SHALL BE REMOVED.
11. ALL REMAINING TOPSOIL STOCKPILES SHALL BE SEEDED OR HAULED OFF-SITE WITHIN 60 DAYS OF CONSTRUCTION COMPLETION.
12. WINTER STABILIZATION : ALL AREAS REQUIRING SEED AFTER OCTOBER 15TH SHALL BE STABILIZED BY AN APPROVED WINTER STABILIZATION METHOD. THE RECOMMENDED METHOD IS UTILIZING A HYDROSEEDER CONTAINING ADEQUATE TACKIFIER POLYMER MIXED WITH WINTER WHEAT OR RYE SEED. ANOTHER ACCEPTABLE EROSION CONTROL METHOD IS THE LAND APPLICATION OF ANIONIC POLYACRYLAMIDE IN CONFORMANCE WITH WDNR TECHNICAL STANDARD 1050.
13. ADDITIONAL EROSION CONTROL METHODS SUCH AS SILT FENCE, BALE CHECKS, EROSION MAT, (ABOVE AND BEYOND THE QUANTITIES LISTED IN THE BID PROPOSAL) AS NEEDED TO PREVENT WASHOUT OR SILT TRANSFER PROBLEMS WITHIN THE CONSTRUCTION AREA OR DOWNSTREAM SHALL BE CONSIDERED INCIDENTAL TO THIS PROPOSAL.

Reclamation Plan Narrative

1. Construction Methods:
   - Material to be quarried utilizing backhoes, blasting equipment, and dump trucks.
   - Clearing & grubbing of wooded areas utilizing backhoe.
   - Topsoil to be stripped utilizing backhoe or bull dozer.
2. Reclamation Procedures:
   - Restore all reclaimed areas with 8" subsoil plus 4" salvaged topsoil to a depth adequate to grow grasses (12" minimum total soil per County standards).
     - o Areas shall be considered restored when meeting Wisconsin Technical Note – Agronomy–WI–1 "Guidelines for Herbaceous Stand Elevation". All upland slopes exceeding 6% slope need anchored mulching.
     - o Proposed mine bottom will be rock, to be topsoiled, requiring no additional stabilization or restoration.
     - o Seeding requirements.
   - Seedbed of 4" of quality topsoil free of rocks and other debris is essential. Soil should be firm but yet loose enough to allow seed incorporation and water infiltration.
   - Seed mixture must be adapted to site conditions, future management plans and the season of planting. Seed can be drilled (1/4" – 1/2" deep), broadcast (and dragged/raked) or sown by a hydroseeder. A fast growing companion crop (oats, ryegrass, spring wheat) must be planted with any seed mixture to stabilize the soil quickly. The companion crop must be mowed before heading. (To avoid damage to the permanent seeding, mow 8 – 10 inches high). Two standard recommended seed mixtures are shown below.
3. Proposed (Reclaimed) Land Use:
   - Passive Recreation
4. Topsoil Stockpile:
   - Salvaged topsoil will be used on this site. Topsoil stockpile areas are shown. Contractor has option to re-locate stockpile as long as silt fence is placed to prevent off-site run-off of sediments.
   - Reclaim areas upon reaching final grade.
   - Silt fence shall be placed along downslope edge of topsoil stockpile area.
5. Post Mining Drainage:
   - Proposed (reclaimed) contours are shown on the reclamation plan.
   - Note: Finished (reclaimed) contours will vary depending on quality of mined materials. Some areas of undesirable materials may stay higher.
   - Anticipated contours are shown on the map (Phase 1 & ultimate mine shown).
   - Drainage during mining will be completely contained within the mine site through placement of containment berms as shown on this plan.
   - Drainage from restored area will be directed to NW corner of mine site to match current drainage patterns.
7. Erosion Control Methods:
   - Silt fence shall be placed downslope of all topsoiled areas. Additional silt fence and bale checks to prevent sediments from leaving the site.
8. Pollution Potential:
   - The estimated ground water table is estimated at 590.0. Lowest proposed mine surface = 614.0 resulting in 24 feet of separation from bottom of mine to aquifer.
   - Restoration of all phases including stabilization of all disturbed areas will provide grass cover that will blend with the natural surroundings.
   - No fuel or oil storage is permitted on this site. Fuel for equipment will be brought in on a fuel truck.

- Revegetation plan
  - Revegetaion will occur utilizing a traditional broadcast seeder as soon as practical after final placement and preparation of the topsoil.
  - Seedbed preparation will consist of placing topsoil uniformly distributed to a depth of at least 4 inches. Final seeding surface shall be raked and prepped to minimize large stones, roots, branches, etc
  - Seed mix can be a prairie mix similar to the following mix ratio and seeded at a rate of 50 lbs per acre (this option would enhance visual and recreational use):
    - Big bluestem grass 2.5 PLS lbs
    - Canada wild rye grass 2.0 PLS lbs
    - Switchgrass 1.0 PLS lbs
    - Indiangrass 2.5 PLS lbs
    - New England aster forb 0.5 PLS ozs
    - Wild bergamot forb 1.0 PLS ozs
    - Yellow coneflower forb 1.0 PLS ozs
    - Blackeyed susan forb 1.0 PLS ozs
    - Round-headed bush clover legume 1.5 PLS ozs
    - Purple prairie clover legume 3.5 PLS ozs
  - More traditional seed mix can also be used as an option:
    - Smooth bromegrass 50 lbs/acre
    - Perennial ryegrass 30 lbs/acre
    - Creeping red fescue 25 lbs/acre
    - Annual ryegrass 4 bushels/acre
  - Fertilizer shall be applied to all seeded areas at a rate of 200 lbs/acre.
  - Straw mulch shall be applied over seed bed at a rate of 1 ton/acre.
  - Temporary topsoil stockpiles shall be seeded with annual ryegrass at a rate of 30 lbs/acre.

Silt Fence Detail

NO SCALE

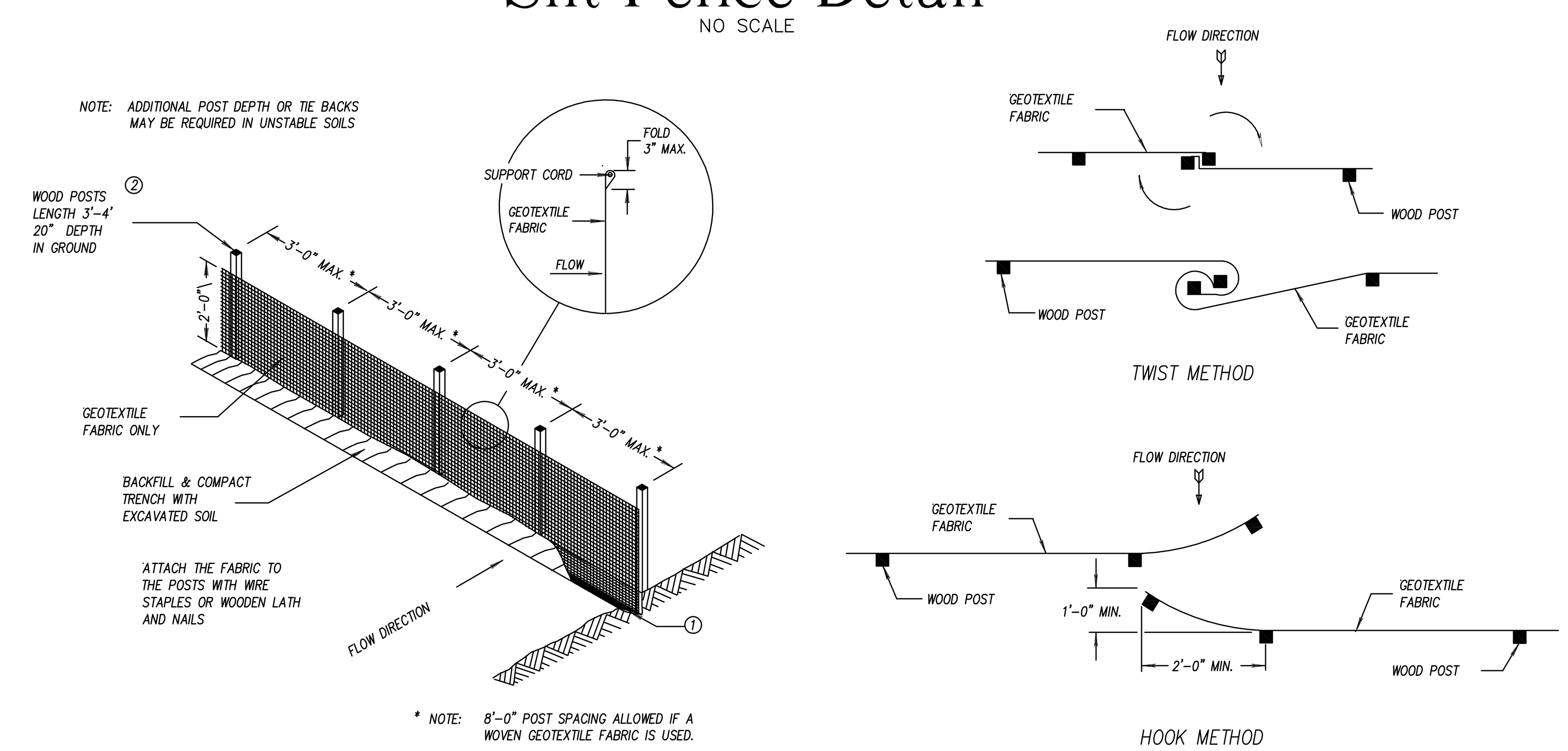

SILT FENCE

JOINING TWO LENGTHS OF SILT FENCE ③

GENERAL NOTES

① TRENCH SHALL BE A MINIMUM OF 4" WIDE & 6" DEEP TO BURY AND ANCHOR THE GEOTEXTILE FABRIC. FOLD MATERIAL TO FIT TRENCH AND BACKFILL & COMPACT TRENCH WITH EXCAVATED SOIL.

② WOOD POSTS SHALL BE A MINIMUM SIZE OF 1-1/8" x 1-1/8" OF OAK OR HICKORY.

③ CONSTRUCT SILT FENCE FROM A CONTINUOUS ROLL IF POSSIBLE BY CUTTING LENGTHS TO AVOID JOINTS. IF A JOINT IS NECESSARY USE ONE OF THE FOLLOWING TWO METHODS; A) OVERLAP THE END POSTS AND TWIST, OR ROTATE, AT LEAST 180 DEGREES, B) HOOK THE END OF EACH SILT FENCE LENGTH.

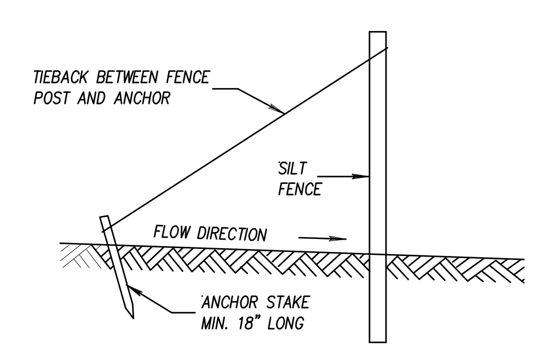

SILT FENCE TIE BACK
(WHEN ADDITIONAL SUPPORT REQUIRED)

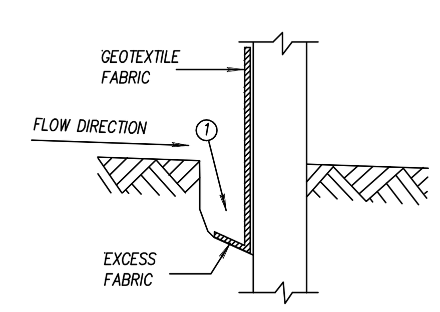

TRENCH DETAIL

NOTE:
SILT FENCE SHALL CONFORM TO WDNR TECHNICAL STANDARD 1056.

BAUDHUIN SURVEYING & ENGINEERING
312 N. 5TH AVE.
P.O. BOX 105
STURGEON BAY, WI. 54235
PHONE: 920-743-8211

PATH: \RMB\LDWG\
PROJECT DIRECTORY: DVORAK QUARRY – 24012
DRAWN BY: vb
PLAN NAME: 012-DES-A
DESIGNED BY: P.J.H.
REVISED DATE: 06-12-20
DATE: 2-24-20
SCALE: NONE
JOB NUMBER: 24012

Dvorak Quarry

CONSTRUTION DETAILS

REUSE OF DOCUMENTS
THIS DOCUMENT HAS BEEN DEVELOPED FOR A SPECIFIC APPLICATION AND NOT FOR GENERAL USE. THEREFORE IT MAY NOT BE USED WITHOUT THE WRITTEN APPROVAL OF BAUDHUIN INCORPORATED. UNAPPROVED USE IS THE SOLE RESPONSIBILITY OF THE UNAUTHORIZED USER.

Temporary Sediment Basin

NO SCALE
(IN ACCORDANCE WITH WDNR TECHNICAL STANDARD 1064)

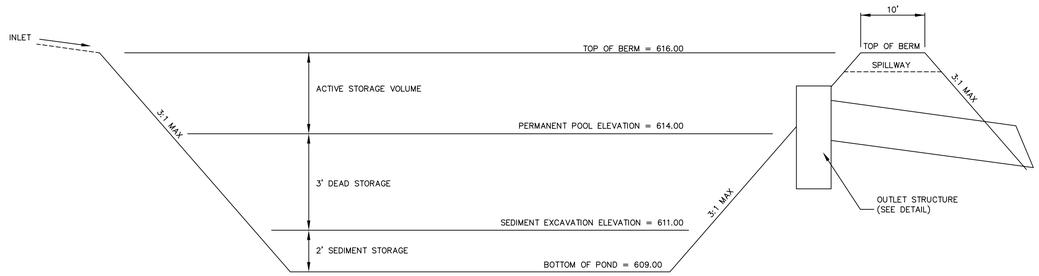

Temporary Sediment Basin Outlet Structure Detail

NO SCALE
(IN ACCORDANCE WITH WDNR TECHNICAL STANDARD 1064)

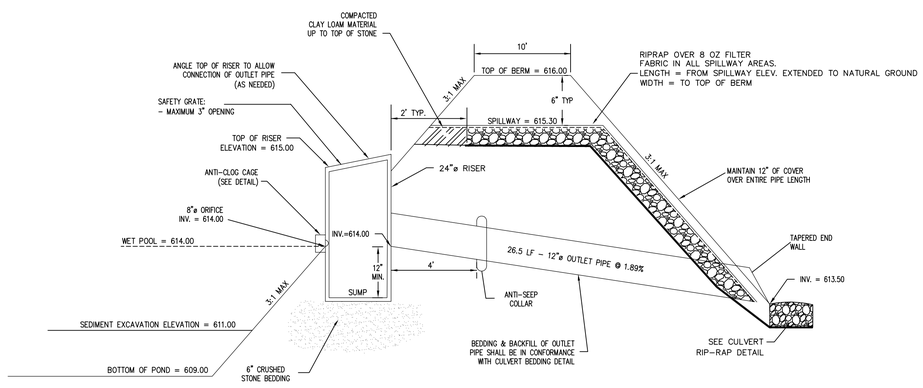

Temporary Sediment Basin - Plan View

NO SCALE

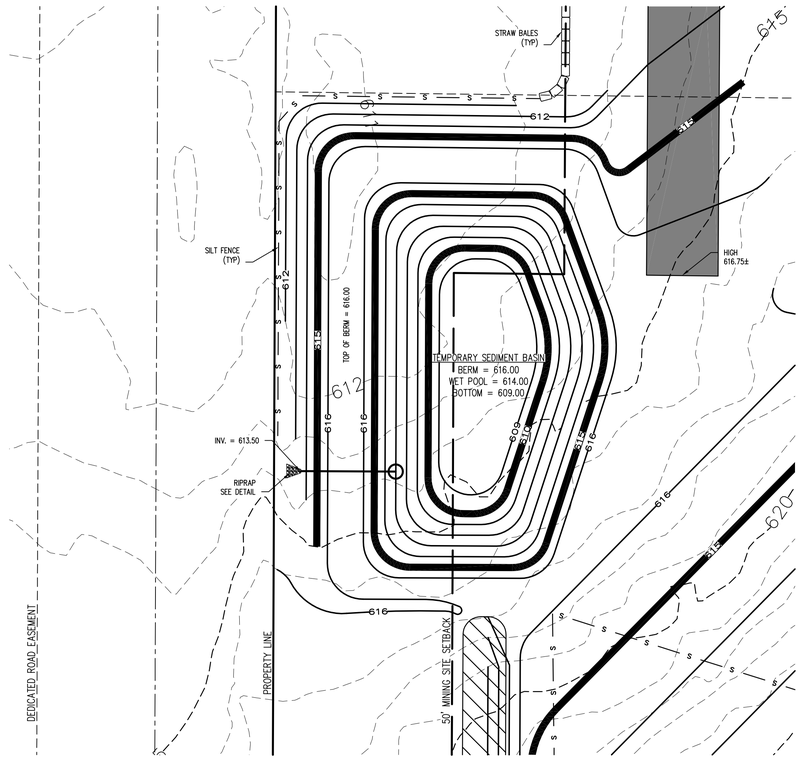

Temporary Sediment Basin Spillway Detail

NO SCALE
(IN ACCORDANCE WITH WDNR TECHNICAL STANDARD 1064)

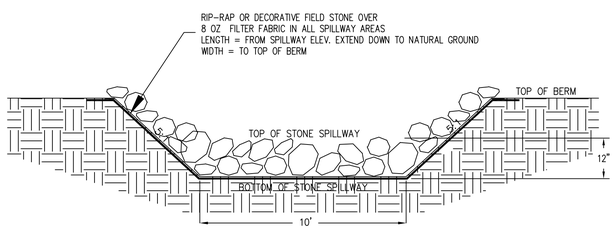

Anti-Clog Cage Detail

NO SCALE

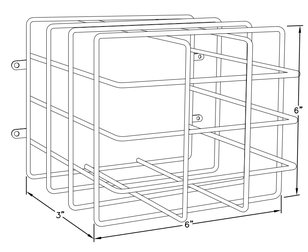

SPECIFICATIONS:
- EXTEND 3" OUT FROM ORIFICE
- < 1" MAX. OPENINGS - USE SCREENING OVER CAGE OR SIMILAR
- ATTACH CAGE TO CONCRETE RISER FACE USING MIN (4) 3/8" TAPCONS, OR SIM.
- DETAIL AS SHOWN ABOVE OR SIMILAR

Culvert Rip-rap Detail

NO SCALE

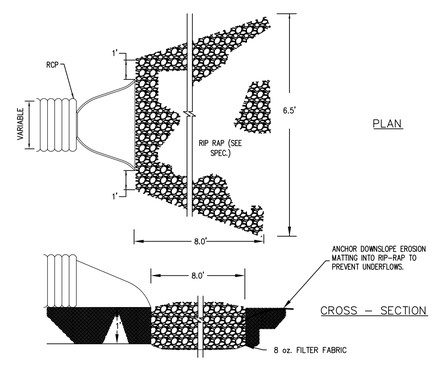

(ALL DOWNSLOPE ENDS OF CULVERTS)

Culvert & Stormsewer Bedding Detail

NO SCALE

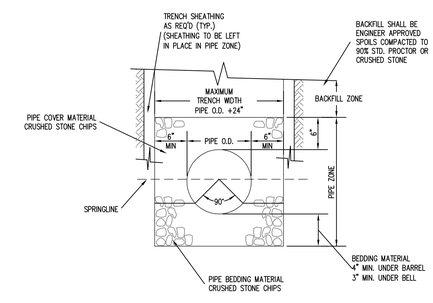

NOTE: 3" OF ADDITIONAL CRUSHED STONE
REQUIRED IN WET TRENCH AT NO
ADDITIONAL COST.

BAUDHUIN
SURVEYING & ENGINEERING
312 N. 5TH AVE.
P.O. BOX 105
STURGEON BAY, WI.
54235
PHONE: 920-743-8211

DRAWN BY: VJS
DESIGNED BY: J.T.L.
DATE: 2-24-20
JOB NUMBER: 24072

PATH: \ANE\LIWCA
PLAN NAME: DTC-TESC-A
PROJECT DIRECTORY: DVORAK QUARRY - 24072
REVISED DATE: 06-12-20
SCALE: NONE

Dvorak Quarry

CONSTRUTION DETAILS

REUSE OF DOCUMENTS:
THIS DOCUMENT HAS BEEN DEVELOPED FOR A SPECIFIC APPLICATION AND NOT FOR GENERAL USE. THEREFORE IT MAY NOT BE USED WITHOUT THE WRITTEN APPROVAL OF BAUDHUIN INCORPORATED. UNAPPROVED USE IS THE SOLE RESPONSIBILITY OF THE UNAUTHORIZED USER.